EVDOS S.A

EVDOS MECHANICAL CONSTRUCTIONS S.A

QUICK RELIEF VALVE TYPE QR-S

EVDOS S.A

QUICK RELIEF VALVE TYPE QR-S
PN 10 - 16 - 25 - 40

PN 10 - 16

DN mm	Pressure Range BAR	Over Pressure max BAR	Q max L/S
	1 _ 7	1,2	32
50	6 _ 12	1,8	48
	10 _ 17	2,3	65
	1 _ 7	1,5	46
60-65	6 _ 12	1,8	65
	10 _ 17	2,5	85
	1 _ 7	1,5	85
80	6 _ 12	2	130
	10 _ 17	2,5	160
	1 _ 7	1,6	120
100	6 _ 12	2	220
	10 _ 17	2,6	260
	1 _ 7	1,8	160
125	6 _ 12	2,5	290
	10 _ 17	2,8	350
	1 _ 7	2	280
150	6 _ 12	2,5	400
	10 _ 17	3	480
	1 _ 7	2	390
200	6 _ 12	2,7	680
	10 _ 17	3,5	886
	1 _ 7	2,2	750
250	6 _ 12	2,9	1050
	10 _ 17	3,8	1400
	1 _ 7	2,3	1100
300	6 _ 12	3,1	1550
	10 _ 17	4,0	2000

The pressure relief valve is constructed in order to protect main pipe lines from water hammer . The basic design consist of a fixed nozzle , a disc and a preloaded spring.

Each valve is regulated and tested in a specially test bench in the factory , under pressure which is settled by the customer.
The valve is regulated at the place where is installed , 5% - 10% more than the work pressure.
The max pressure in the pipe with fully open valve is : the pressure regulation + overpressure

Example:
Quick relief valve DN 150
Network pressure in the installation position = 11 bar
Pressure regulation = 11 bar + 10% = 12,1 bar
Flow = 350 l/s
Overpressure = 2,5 * 350/400 = 2,2 bar
Max.pressure = 12,1 + 2,2 = 14,3 bar.

PN 25

DN mm	Pressure Range BAR	Over Pressure max BAR	Q max L/S
50	16 _ 25	3,2	75
60-65	16 _ 25	3,5	95
80	16 _ 25	3,7	180
100	16 _ 25	3,8	300
125	16 _ 25	3,8	405
150	16 _ 25	4	525
200	16 _ 25	5	960
250	16 _ 25	5	960
300	16 _ 25	5	960

PN 40

DN mm	Pressure Range BAR	Over Pressure max BAR	Q max L/S
50	25 _ 40	3	150
60-65	25 _ 40	3,8	285
80	25 _ 40	3,9	350
100	25 _ 40	4,1	480
125	25 _ 40	4,2	695
150	25 _ 40	4,2	995

DESCRIPTION	NORMES
Body	EN 1092-1 / EN 10025
Dimensions	DN 50 - 300
Pressure max.	PN 10-16-25-40
Coating	Powder epoxy 250 microns DIN 30677
Testing	EN 12266

EVDOS S.A

QUICK RELIEF VALVE TYPE QR-S
PN 10 - 16 - 25 - 40

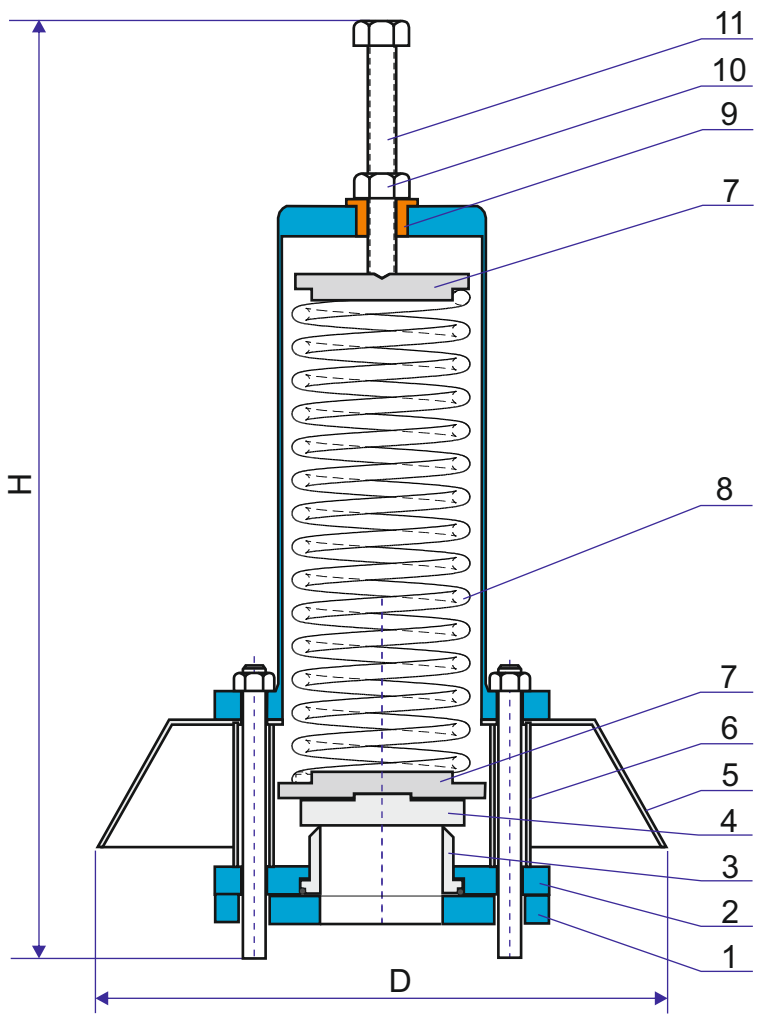

DIMENSIONS PN 10/16

DN	D	H	Kg
50	400	600	28
60-65	400	600	29
80	400	600	33
100	400	680	44
125	470	700	50
150	530	730	75
200	600	780	145
250	600	800	160
300	700	820	210

DIMENSIONS PN 25-40

DN	D	H	Kg
50	400	600	29
60-65	400	600	30
80	400	680	42
100	400	700	50
125	470	770	81
150	530	770	93
200	600	800	190
250	600	800	175
300	700	840	230

POS	DESCRIPTION	MATERIEL
1	Pipe flange	Steel EN 10025
2	Lower plate	Steel EN 10025
3	Nozzle	Stainless Steel
4	Valve disc	Stainless Steel
5	Cover	Steel EN 10025
6	Defector	Steel
7	Spring lower cap	Steel EN 10025
8	Spring	Steel DIN 17223
9	Quide shaft	Brass
10	Nut	Stainless Steel
11	Adjusting screw	Stainless Steel
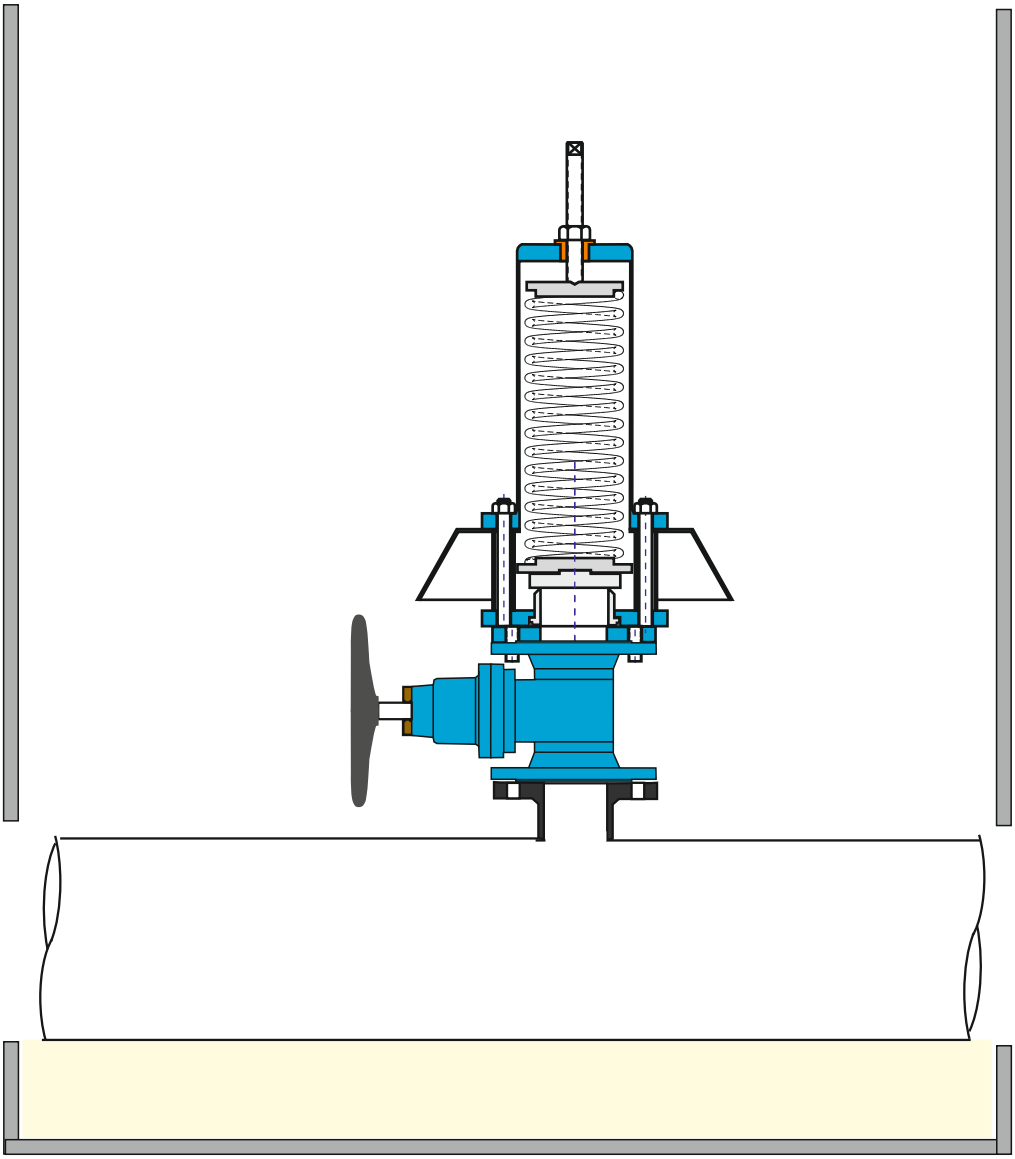
ASSEMBLY